TB 150L-10

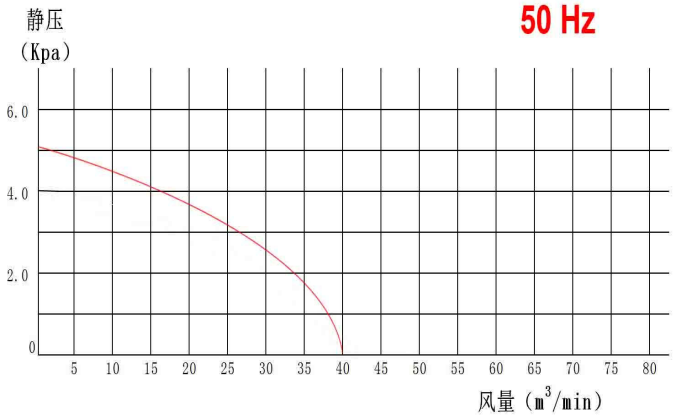

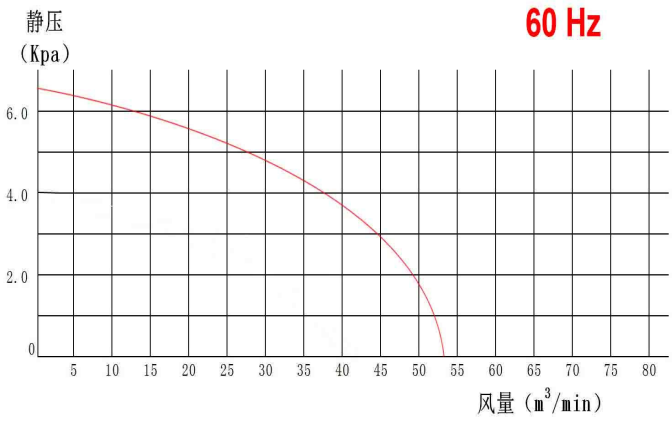

TB150L-10

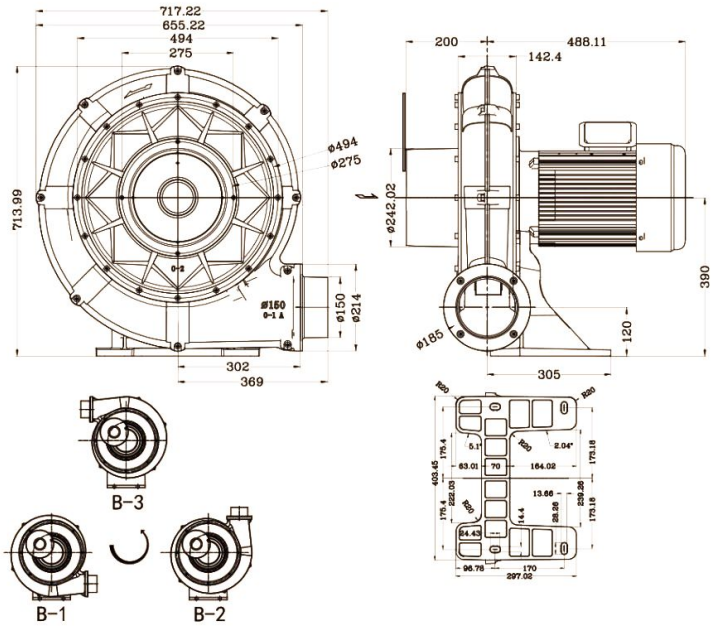

TB150-10

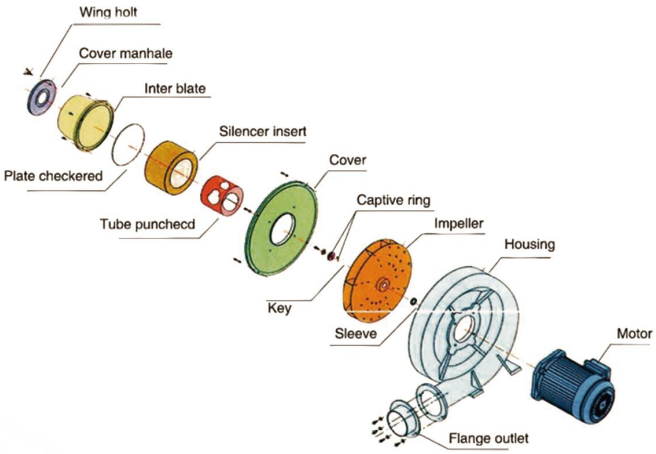

TB SERIES SPECIFICATION SHEET

风机型号 Type	相数 Phase	功率 Power (KW)	额定电压 Voltage (V)	额定电流 Current (A)	最大静压(吐出) Vacuum/Presure (max) (KPa)	最大风量(吐出) Air Flow (max) (m3/min)	出入口口径 In/Out (mm)	噪音 Noise Level (dB)	重量 Weight (Kg)
TB100-1	1 ~ 3 ~	0.75	220 220 / 380	5 3/ 2.0	1.3/2.1	18/22	IN 200 OUT 100	70/80	21
TB100-2	1 ~ 3 ~	1.5	220 220 / 380	9 5.5/ 3.5	2/3	20/25	IN 200 OUT 100	70/85	28
TB125-3	3 ~	2.2	220 / 380	8/5	2.4/3.6	33/ 39	IN 252 OUT 125	80/90	37
TB150-5	3 ~	3.7	220 / 380	13/7.5	3.8/5.3	48/53	IN 252 OUT 150	90/95	52
TB150-7.5	3 ~	5.5	220 / 380	19/11.5	4/5.3	50/65	IN 252 OUT 150	90/95	73
TB150-10	3 ~	7.5	220 / 380	26/15.5	4/5.3	60/75	IN 252 OUT 150	90/95	82
TB150L-10	3 ~	7.5	220 / 380	26/18	5/6.5	40/53	IN 252 OUT 150	90/100	85
TB200-15	3 ~	11	220 / 380	36/22	5/6.5	65/85	IN 315 OUT 200	95/110	117
TB200-20	3 ~	15	220 / 380	47/28	5/7	90/100	IN 315 OUT 200	95/110	130

Manvac TB whole series outlet direction Can rotare in all 360° eight directions,And the left and right directions of the motor can be adjusted.The highly customized service has won us many praises, but Manvac will continue to provide customers with more personalized customized products.